YML YUANMING LIGHTING

High Bay Lighting

YML-1HB06 Series

Models passed DLC listed:
YML-1HB06-2FT-110-FL,
YML-1HB06-2FT-160-FL,
YML-1HB06-4FT-220-FL,
YML-1HB06-4FT-320-FL,
YML-1HB06-2FT-110-CL,
YML-1HB06-2FT-160-CL,
YML-1HB06-4FT-220-CL,
YML-1HB06-4FT-320-CL

c UL us LISTED

DLC QPL LISTED

120 ~ 277V

Applications

Industrial Factories, Warehouses, Stadiums, Airports, Railway Stations, Gas Stations, Supermarkets, and other Indoor Locations.

- Efficiency of chips: 170-200 lm/w
- LENS: Optical grade PC, anti-UV oxidation.
- Beam Angle: 120°
- Input voltage: 120-277 VAC, 50/60 HZ
- LED driver: constant current, efficiency is up to 92%, PF≥0.95.
- Suitable for damp location.

Dimension[Unit:Inch(mm)]

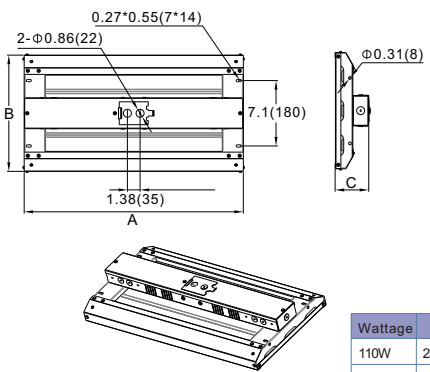

Wattage	A	B	C
110W	23.8(604)	12.6(320)	3.62(92)
160W	23.8(604)	17.3(440)	3.62(92)
220W	45.9(1166)	12.6(320)	3.62(92)
320W	45.9(1166)	17.3(440)	3.62(92)

Distribution Curve Flux

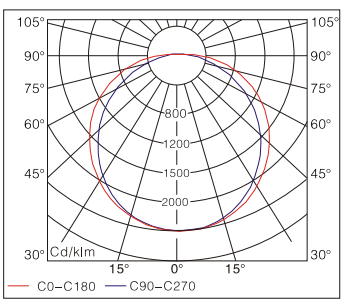

120°

Ordering Information

Example: YML-1HB06-2FT-110-FL-850-W-120-1

Company code	Voltage	Type	Length of Luminaire	Power	Lamp-shade	Ra	Colour Temp.	Colour Options	Optic	Options
YML	**1** 120~277VAC	**HB 06**	**2FT**	**110** (110W 13750Lumens) **160** (160W 19280Lumens)	**FL** Frosted lens	**8** 80	**40** 4000K **50** 5000K **57** 5700K	W White (standard)	**120** 120	**1** 0~10V dimming
			4FT	**220** (220W 26730Lumens) **320** (320W 39360Lumens)						
			2FT	**110** (110W 14080Lumens) **160** (160W 2000Lumens)	**CL** Clear lens					
			4FT	**220** (220W 27764Lumens) **320** (320W 40960Lumens)						